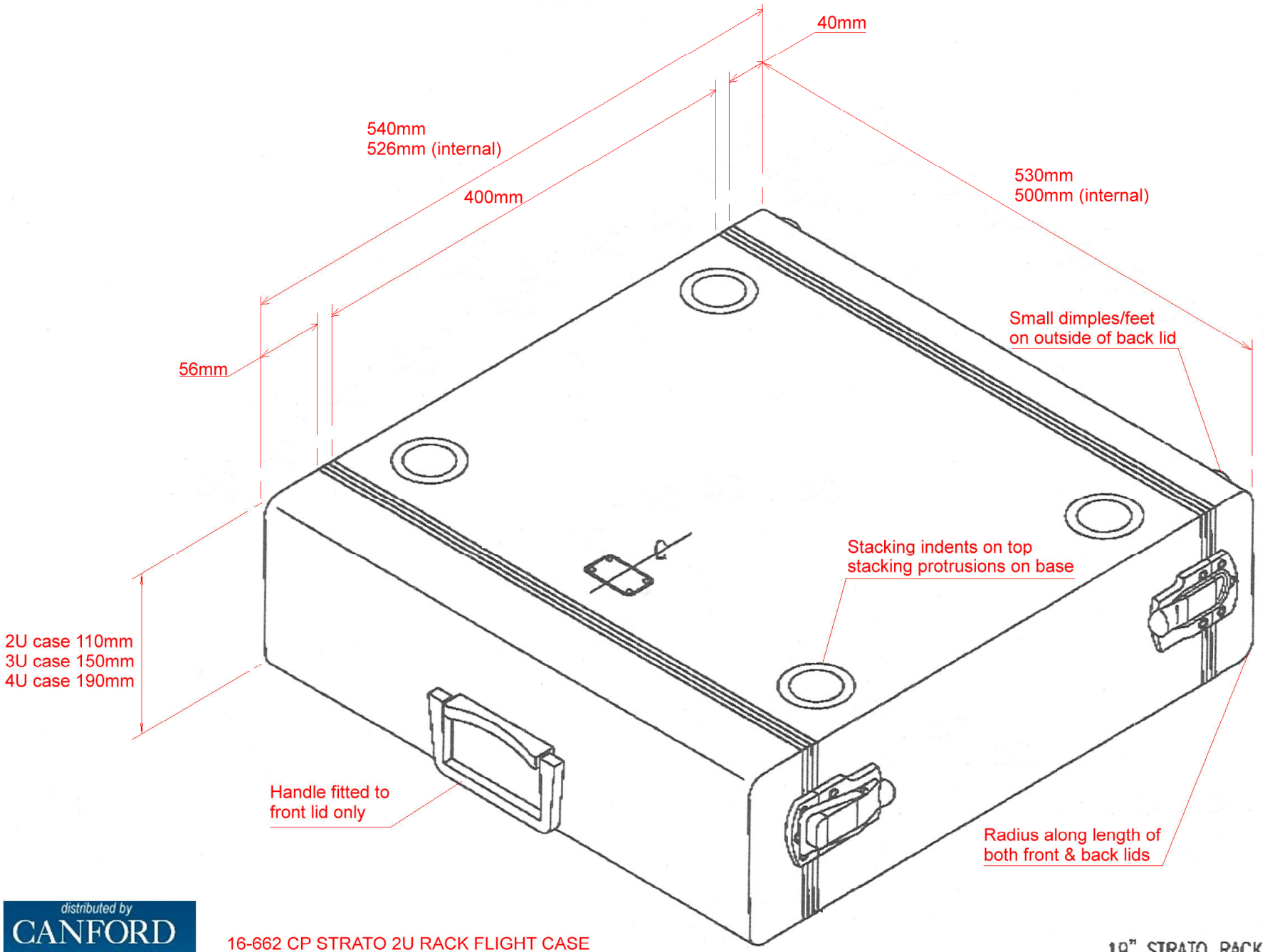

distributed by CANFORD
www.canford.co.uk

16-662 CP STRATO 2U RACK FLIGHT CASE
16-663 CP STRATO 3U RACK FLIGHT CASE
16-664 CP STRATO 4U RACK FLIGHT CASE

19" STRATO RACK

Copyright © 1997 CP Mego Limited